REVISION				
ZONE	REV.	DESCRIPTION	DATE	APPROVED

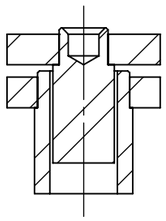

SECTION A-A

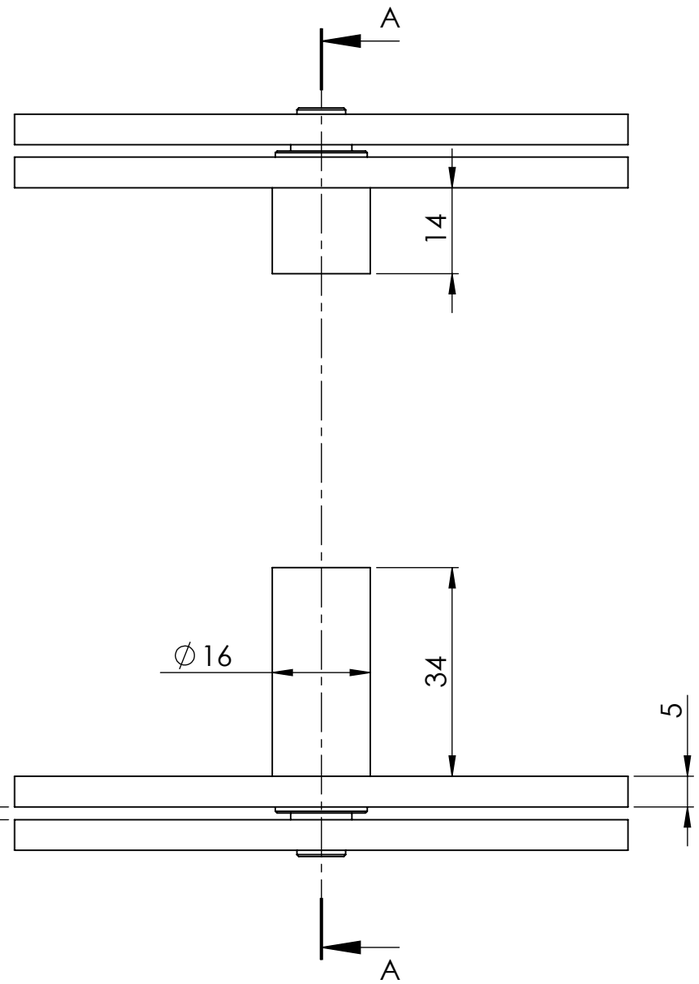

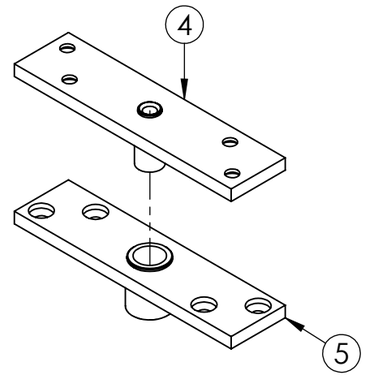

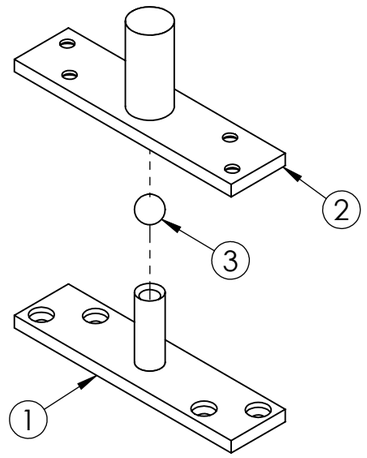

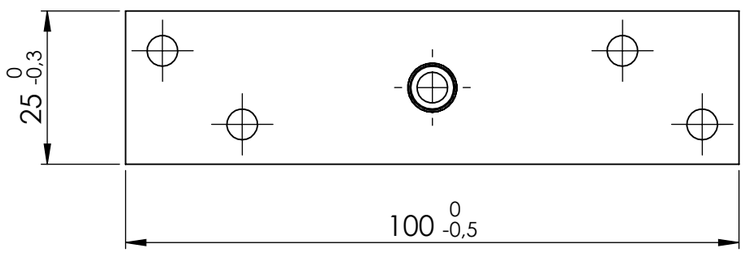

Note:

- All materials AISI 304

ITEM	PART NO.	DESCRIPTION	QTY.
1	800PIP.01	LOWER MALE PIVOT	1
2	800PIP.02	LOWER FEMALE PIVOT	1
3	800PIP.03	SPHERE Ø8 MM	1
4	800PIP.04	UPPER MALE PIVOT	1
5	800PIP.05	UPPER FEMALE PIVOT	1

SYNTER

THIS DOCUMENT IS PROPERTY OF SYNTER. THEREFORE IS NOT ALLOWED TO BE REPRODUCED OR DISCLOSED TO THIRD PARTIES WITHOUT PRIOR AUTHORIZATION.
ALL RIGHTS RESERVED.

PROJECTION

DIMENSIONAL TOLERANCES STANDARDS WHEN NOT SPECIFICATED: ACCORDING TO ISO2768-m

GEOMETRIC TOLERANCES STANDARDS WHEN NOT SPECIFICATED: ACCORDING TO ISO2768-K

DESCRIPTION: *PIVOT HINGE 800*

DESIGN BY: *R. CHIODELLI*

APPROVED BY: *R. CHIODELLI*

DATE: 16/10/2017

SURFACE FINISHING: POLISHED

PART NO.: 800PIP

WEIGHT (Kg): 0.44

ESCALE: 1:1

PAGE: 1 OF 6

SHEETS: A3

REVISIONS

ZONE	REV.	DESCRIPTION	DATE	APPROVED

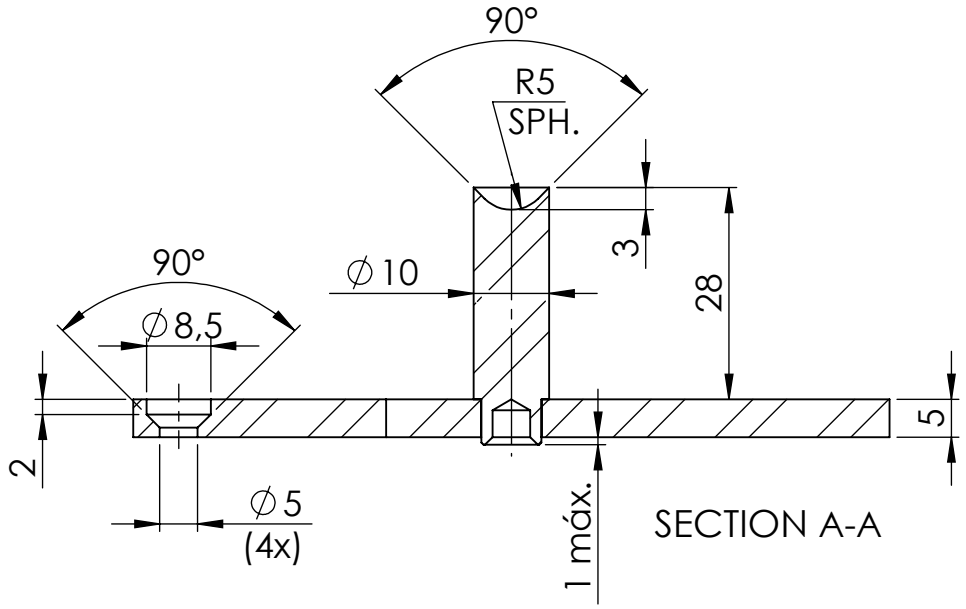

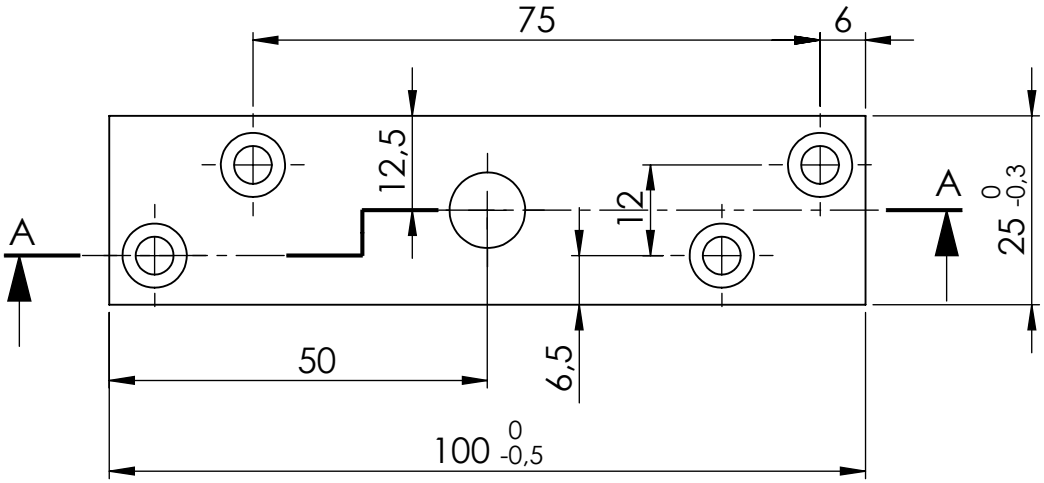

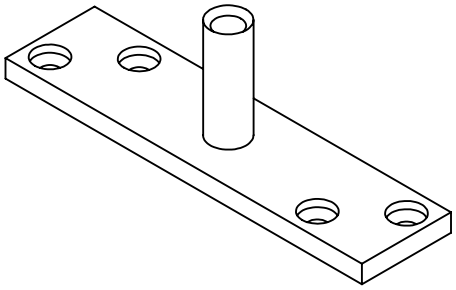

SYNTER

THIS DOCUMENT IS PROPERTY OF SYNTER. THEREFORE IS NOT ALLOWED TO BE REPRODUCED OR DISCLOSED TO THIRD PARTIES WITHOUT PRIOR AUTHORIZATION.
ALL RIGHTS RESERVED.

PROJECTION

DIMENSIONAL TOLERANCES STANDARDS WHEN NOT SPECIFICATED: ACCORDING TO ISO2768

SURFACE FINISHING: POLISHED

DESCRIPTION: *LOWER MALE PIVOT*

DESIGN BY: *R. CHIODELLI*	MATERIAL: AISI 304	WEIGHT (Kg): 0.11
APPROVED BY: *R. CHIODELLI*		ESCALE: 1:1
DATE: 16/10/2017	PART NO.: 800PIP.01	PAGE: 2 OF 6
		SHEETS: A4

REVISIONS

ZONE	REV.	DESCRIPTION	DATE	APPROVED

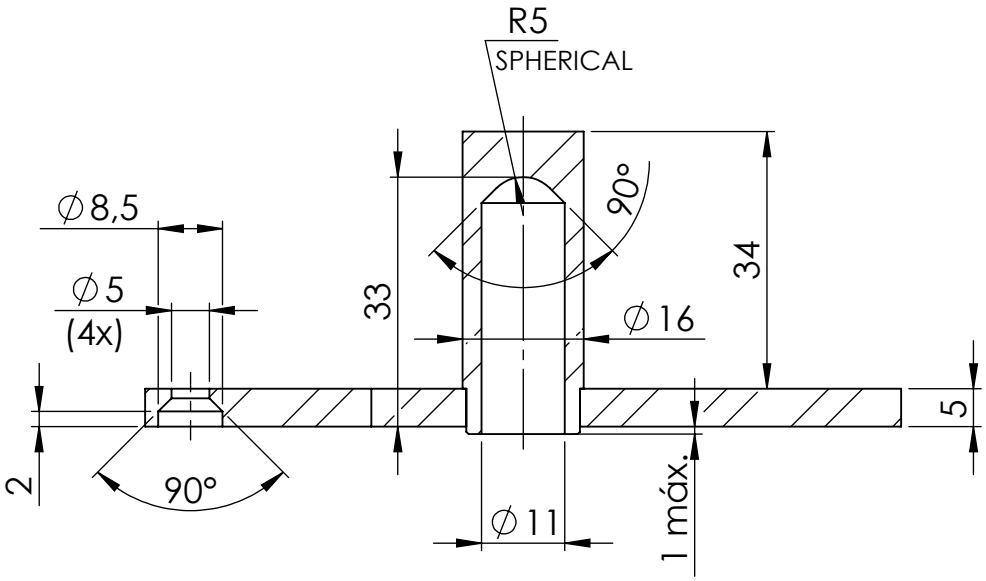

SECTION A-A

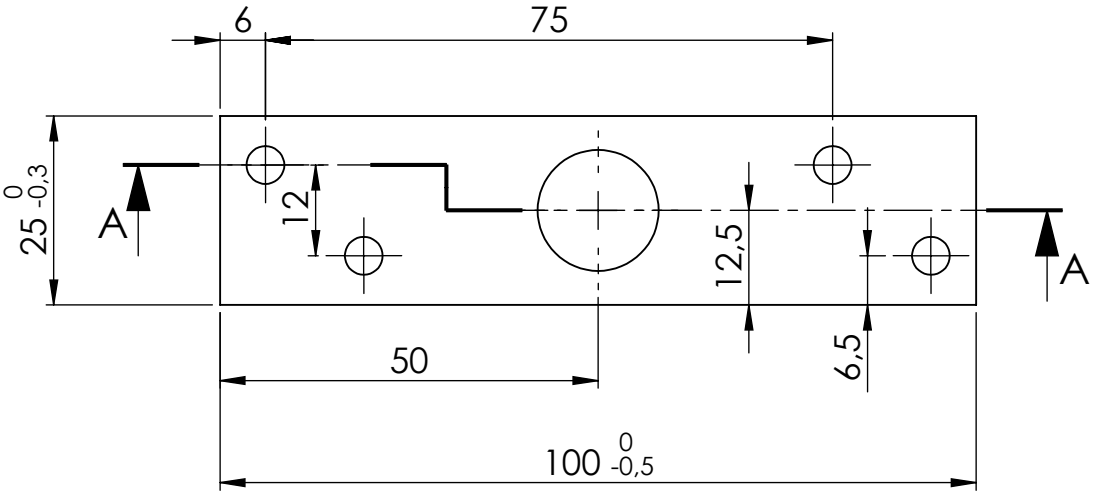

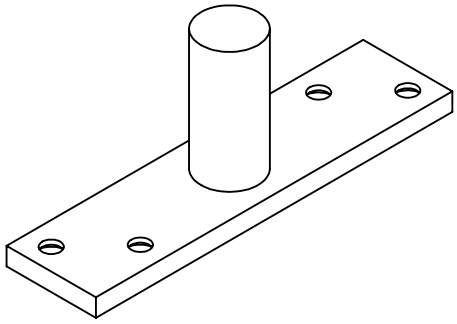

THIS DOCUMENT IS PROPERTY OF SYNTER. THEREFORE IS NOT ALLOWED TO BE REPRODUCED OR DISCLOSED TO THIRD PARTIES WITHOUT PRIOR AUTHORIZATION.
ALL RIGHTS RESERVED.

PROJECTION

DIMENSIONAL TOLERANCES STANDARDS WHEN NOT SPECIFICATED: ACCORDING TO ISO2768

SURFACE FINISHING: POLISHED

DESCRIPTION: *LOWER FEMALE PIVOT*

DESIGN BY: *R. CHIODELLI*	MATERIAL: AISI 304	WEIGHT (Kg): 0.13
APPROVED BY: *R. CHIODELLI*		ESCALE: 1:1
DATE: 16/10/2017	PART NO.: 800PIP.02	PAGE: 3 OF 6
		SHEETS: A4

REVISIONS

ZONE	REV.	DESCRIPTION	DATE	APPROVED

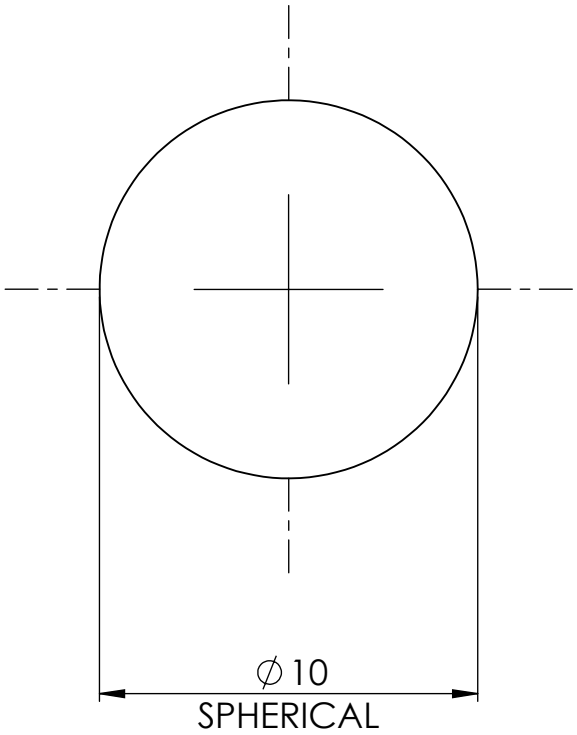

THIS DOCUMENT IS PROPERTY OF SYNTER. THEREFORE IS NOT ALLOWED TO BE REPRODUCED OR DISCLOSED TO THIRD PARTIES WITHOUT PRIOR AUTHORIZATION.
ALL RIGHTS RESERVED.

PROJECTION

DIMENSIONAL TOLERANCES STANDARDS WHEN NOT SPECIFICATED
ACCORDING TO ISO2768

SURFACE FINISHING
POLISHED

DESCRIPTION
SPHERE Ø8 MM

DESIGN BY *R. CHIODELLI*	MATERIAL AISI 304	WEIGHT (Kg) 0.00
APPROVED BY *R. CHIODELLI*		ESCALE 5:1
DATE 16/10/2017	PART NO. 800PIP.03	PAGE 4 OF 6
		SHEETS A4

REVISIONS

ZONE	REV.	DESCRIPTION	DATE	APPROVED

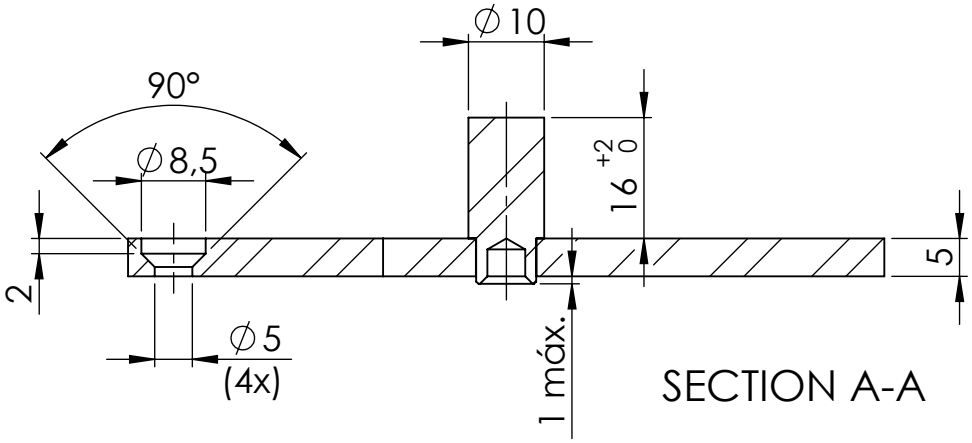

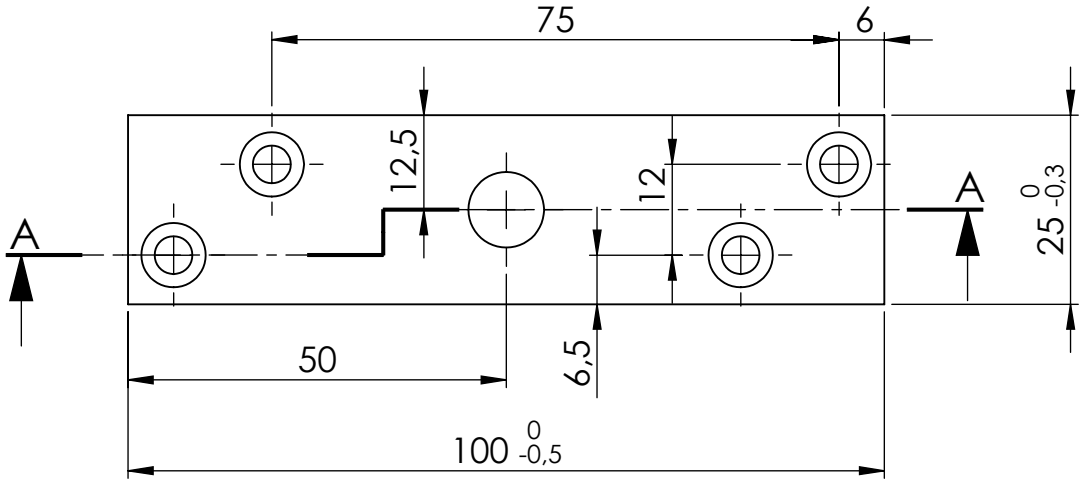

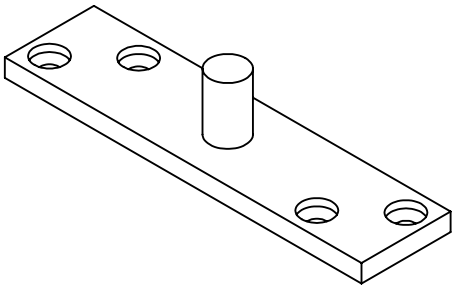

THIS DOCUMENT IS PROPERTY OF SYNTER. THEREFORE IS NOT ALLOWED TO BE REPRODUCED OR DISCLOSED TO THIRD PARTIES WITHOUT PRIOR AUTHORIZATION.
ALL RIGHTS RESERVED.

PROJECTION

DIMENSIONAL TOLERANCES STANDARDS WHEN NOT SPECIFICATED: ACCORDING TO ISO2768

SURFACE FINISHING: POLISHED

DESCRIPTION: *UPPER MALE PIVOT*

DESIGN BY	MATERIAL	WEIGHT (Kg)
R. CHIODELLI	AISI 304	0.10
APPROVED BY: *R. CHIODELLI*		ESCALE: 1:1
DATE: 16/10/2017	PART NO.: 800PIP.04	PAGE: 5 OF 6
		SHEETS: A4

REVISIONS

ZONE	REV.	DESCRIPTION	DATE	APPROVED

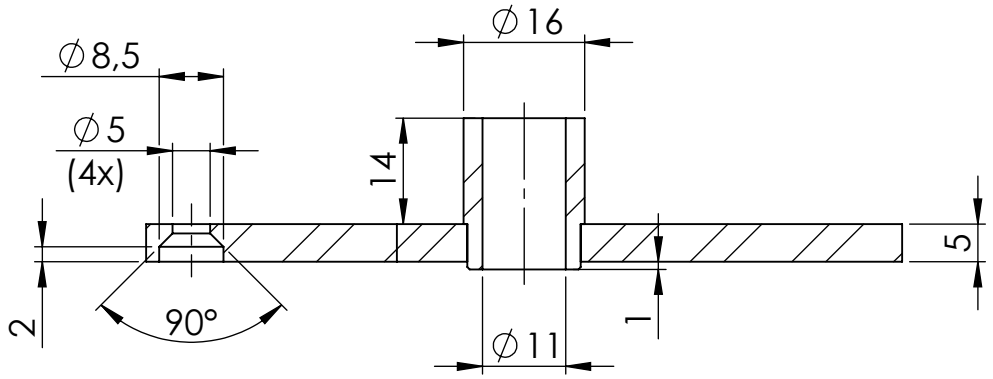

SECTION A-A

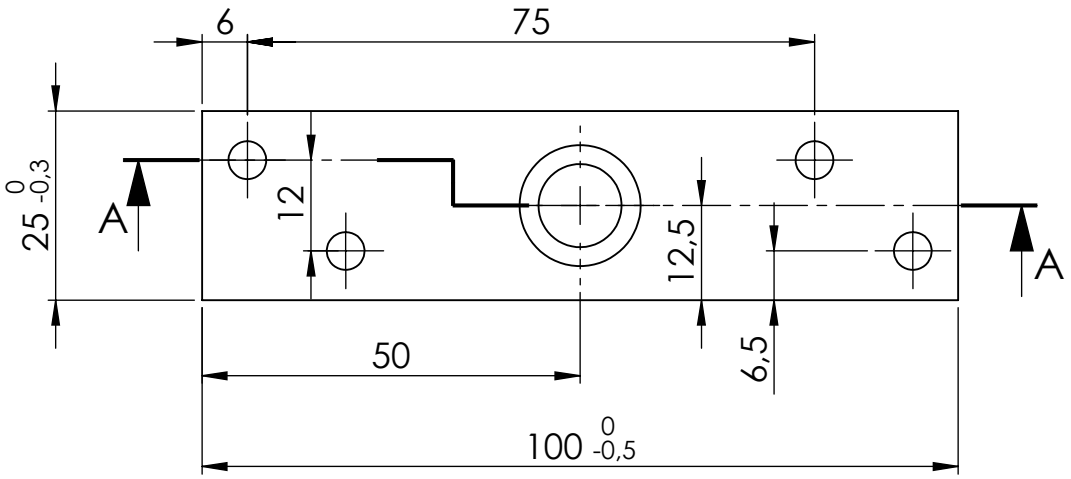

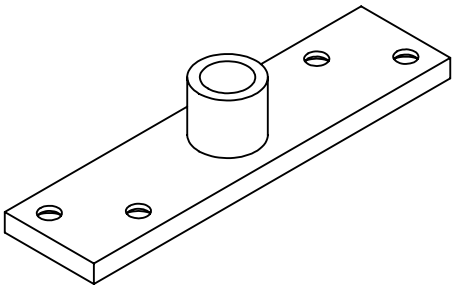

THIS DOCUMENT IS PROPERTY OF SYNTER. THEREFORE IS NOT ALLOWED TO BE REPRODUCED OR DISCLOSED TO THIRD PARTIES WITHOUT PRIOR AUTHORIZATION.
ALL RIGHTS RESERVED.

PROJECTION

DIMENSIONAL TOLERANCES STANDARDS WHEN NOT SPECIFICATED: ACCORDING TO ISO2768

SURFACE FINISHING: POLISHED

DESCRIPTION: *UPPER FEMALE PIVOT*

DESIGN BY: *R. CHIODELLI*	MATERIAL: AISI 304	WEIGHT (Kg): 0.10
APPROVED BY: *R. CHIODELLI*		ESCALE: 1:1
DATE: 16/10/2017	PART NO.: 800PIP.05	PAGE: 6 OF 6
		SHEETS: A4

REVISION				
ZONE	REV.	DESCRIPTION	DATE	APPROVED

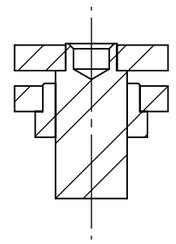

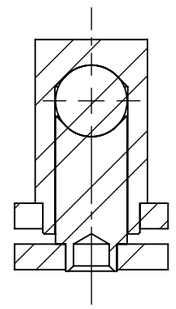

SECTION A-A

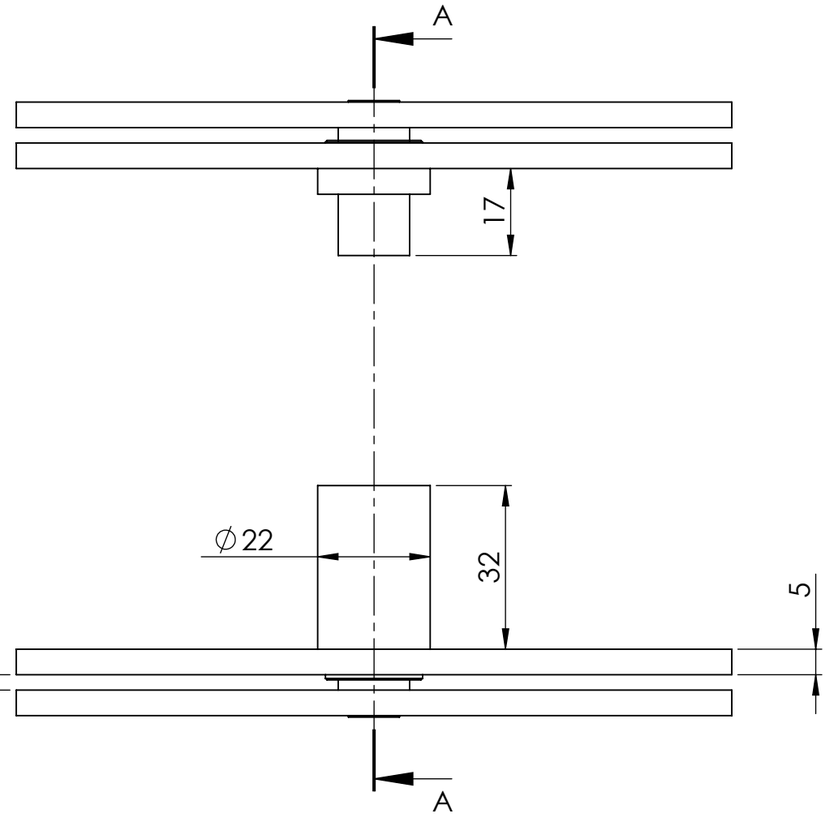

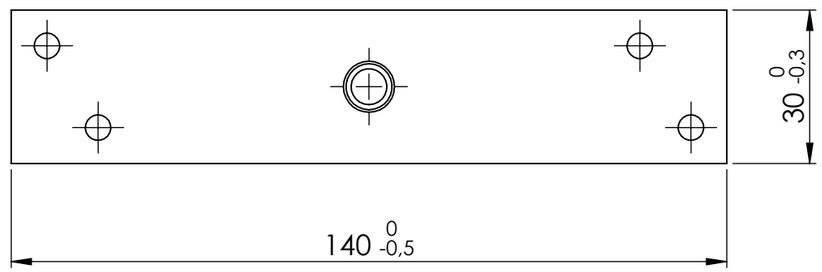

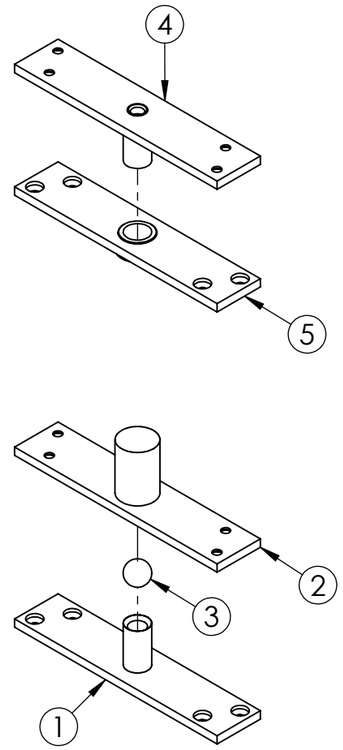

Note:

- All materials AISI 304

ITEM	PART NO.	DESCRIPTION	QTY.
1	810PIP.01	LOWER MALE PIVOT 810	1
2	810PIP.02	LOWER FEMALE PIVOT 810	1
3	810PIP.03	SPHERE Ø14 MM	1
4	810PIP.04	UPPER MALE PIVOT 810	1
5	810PIP.05	UPPER FEMALE PIVOT 810	1

SYNTER

THIS DOCUMENT IS PROPERTY OF SYNTER. THEREFORE IS NOT ALLOWED TO BE REPRODUCED OR DISCLOSED TO THIRD PARTIES WITHOUT PRIOR AUTHORIZATION.
ALL RIGHTS RESERVED.

PROJECTION

DIMENSIONAL TOLERANCES STANDARDS WHEN NOT SPECIFICATED: ACCORDING TO ISO2768-m

GEOMETRIC TOLERANCES STANDARDS WHEN NOT SPECIFICATED: ACCORDING TO ISO2768-K

DESCRIPTION: *PIVOT HINGE 810*

DESIGN BY: *R. CHIODELLI*

APPROVED BY: *R. CHIODELLI*

DATE: 16/10/2017

SURFACE FINISHING: POLISHED

PART NO.: 810PIP

WEIGHT (Kg): 0.77

ESCALE: 1:1.2

PAGE: 1 OF 6

SHEETS: A3

REVISIONS

ZONE	REV.	DESCRIPTION	DATE	APPROVED

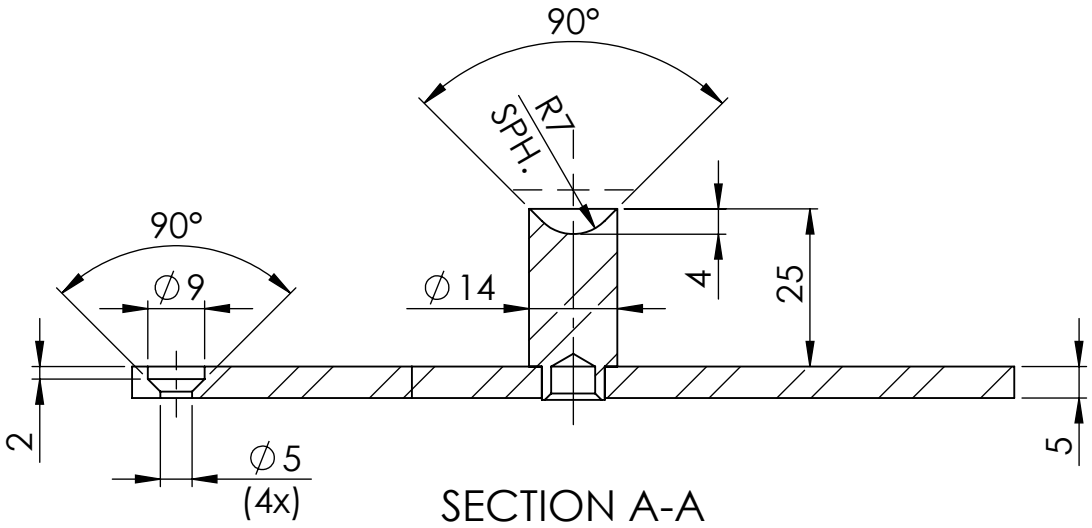

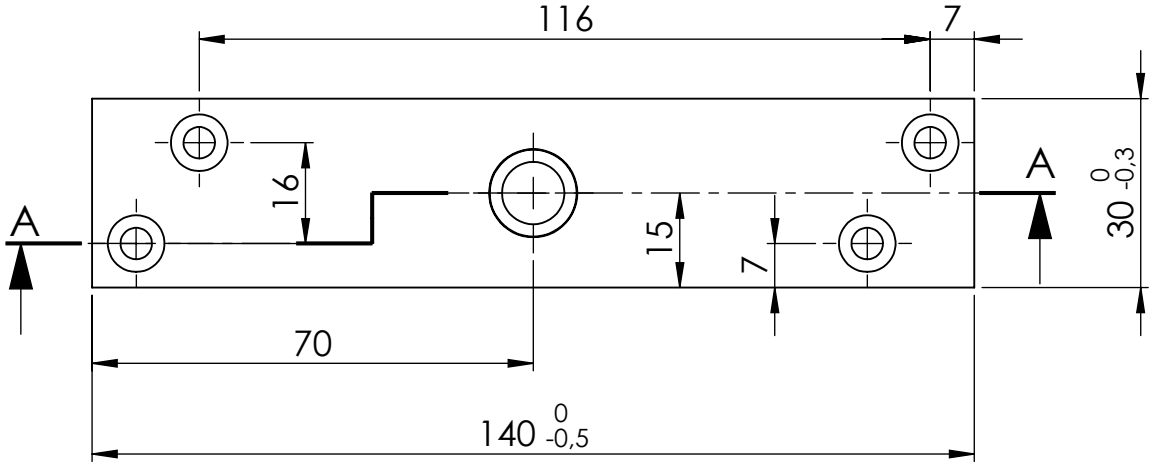

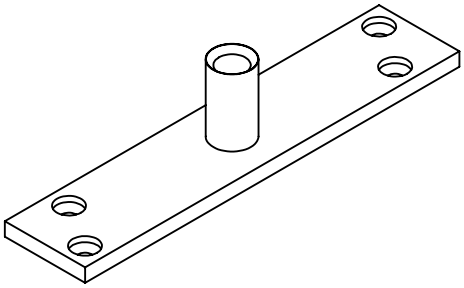

THIS DOCUMENT IS PROPERTY OF SYNTER. THEREFORE IS NOT ALLOWED TO BE REPRODUCED OR DISCLOSED TO THIRD PARTIES WITHOUT PRIOR AUTHORIZATION.
ALL RIGHTS RESERVED.

PROJECTION

DIMENSIONAL TOLERANCES STANDARDS WHEN NOT SPECIFICATED: ACCORDING TO ISO2768

SURFACE FINISHING: POLISHED

DESCRIPTION: *LOWER MALE PIVOT 810*

DESIGN BY: *R. CHIODELLI*	MATERIAL: AISI 304	WEIGHT (Kg): 0.19
APPROVED BY: *R. CHIODELLI*		ESCALE: 1:1.2
DATE: 16/10/2017	PART NO.: 810PIP.01	PAGE: 2 OF 6
		SHEETS: A4

REVISIONS

ZONE	REV.	DESCRIPTION	DATE	APPROVED

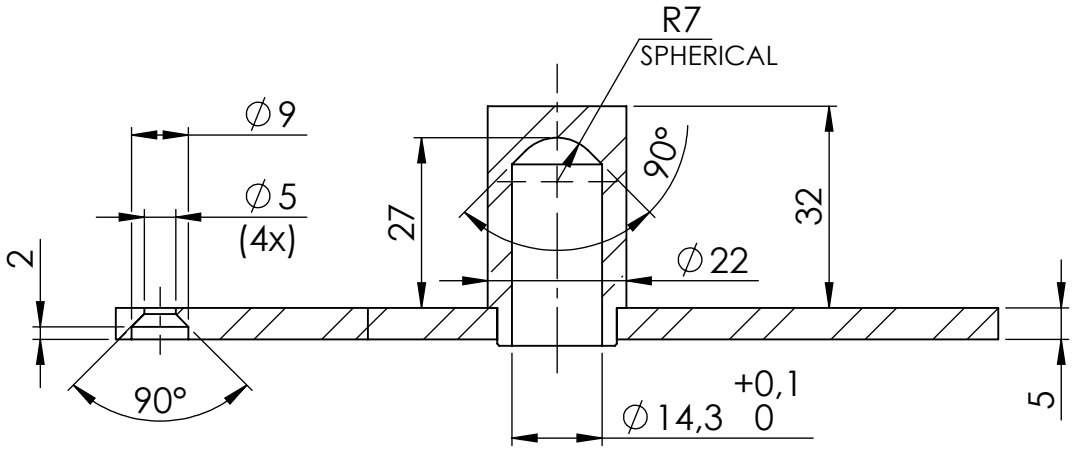

SECTION A-A

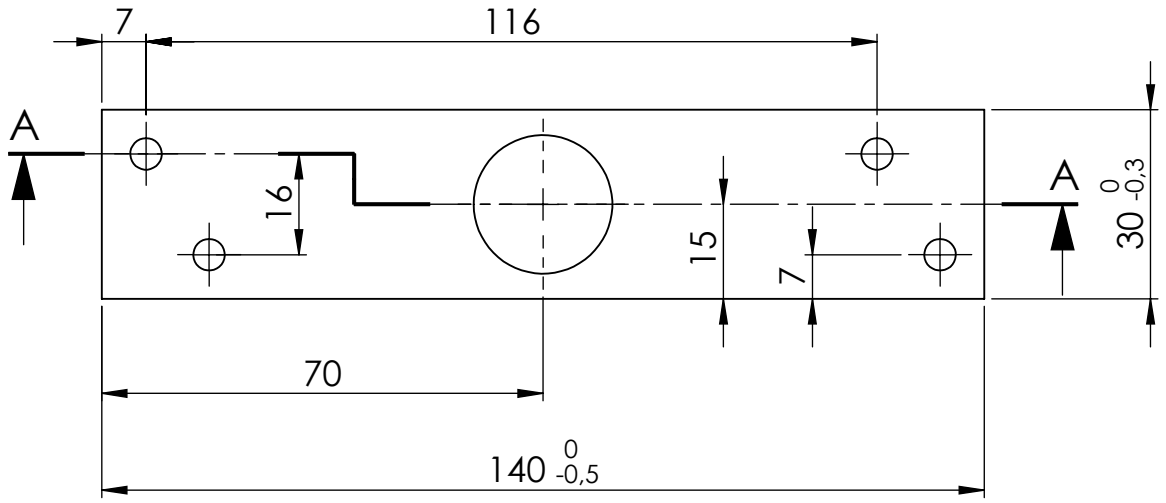

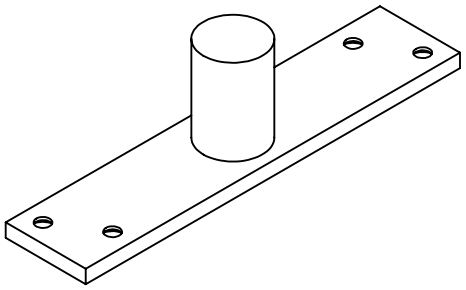

THIS DOCUMENT IS PROPERTY OF SYNTER. THEREFORE IS NOT ALLOWED TO BE REPRODUCED OR DISCLOSED TO THIRD PARTIES WITHOUT PRIOR AUTHORIZATION.
ALL RIGHTS RESERVED.

PROJECTION

DIMENSIONAL TOLERANCES STANDARDS WHEN NOT SPECIFICATED: ACCORDING TO ISO2768

SURFACE FINISHING: POLISHED

DESCRIPTION: *LOWER FEMALE PIVOT 810*

DESIGN BY: *R. CHIODELLI*	MATERIAL: AISI 304	WEIGHT (Kg): 0.22
APPROVED BY: *R. CHIODELLI*		ESCALE: 1:1.2
DATE: 16/10/2017	PART NO.: 810PIP.02	PAGE: 3 OF 6
		SHEETS: A4

REVISIONS

ZONE	REV.	DESCRIPTION	DATE	APPROVED

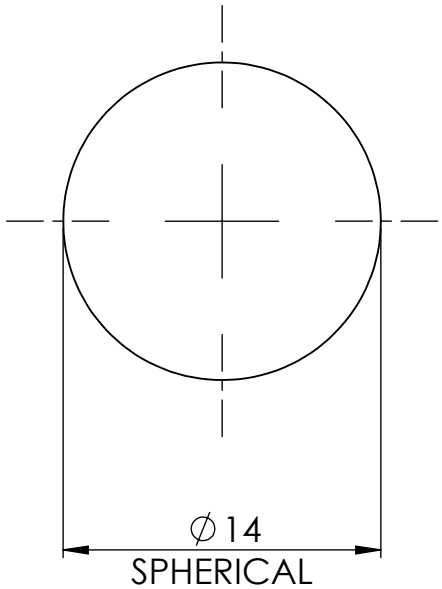

THIS DOCUMENT IS PROPERTY OF SYNTER. THEREFORE IS NOT ALLOWED TO BE REPRODUCED OR DISCLOSED TO THIRD PARTIES WITHOUT PRIOR AUTHORIZATION.
ALL RIGHTS RESERVED.

PROJECTION

DIMENSIONAL TOLERANCES STANDARDS WHEN NOT SPECIFICATED
ACCORDING TO ISO2768

SURFACE FINISHING
POLISHED

DESCRIPTION
SPHERE ∅14 MM

DESIGN BY *R. CHIODELLI*	MATERIAL AISI 304	WEIGHT (Kg) 0.01
APPROVED BY *R. CHIODELLI*		ESCALE 3:1
DATE 16/10/2017	PART NO. 810PIP.03	PAGE 4 OF 6
		SHEETS A4

REVISIONS

ZONE	REV.	DESCRIPTION	DATE	APPROVED

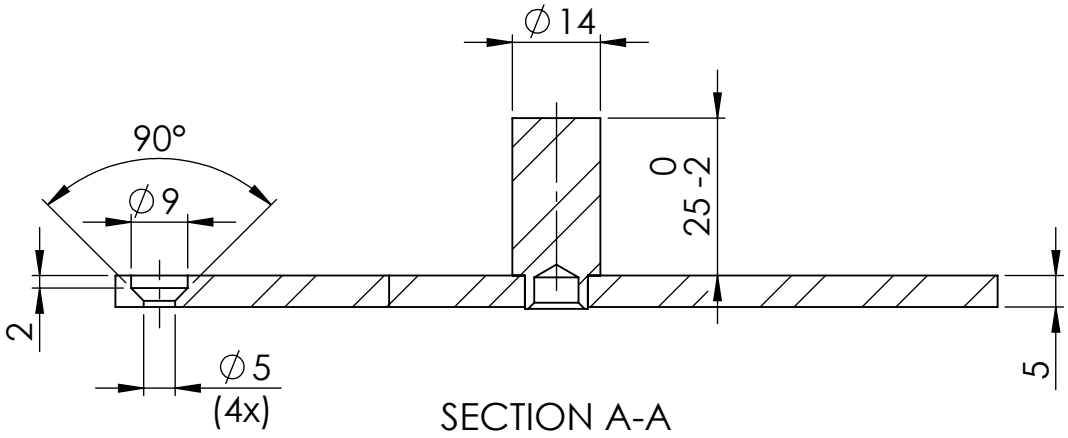

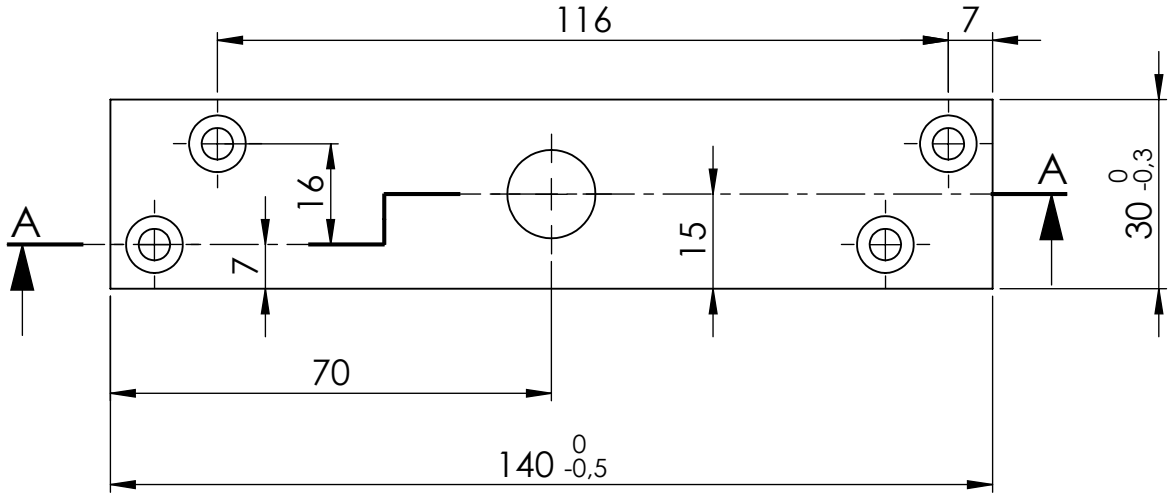

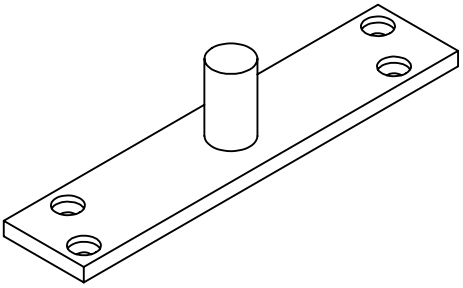

THIS DOCUMENT IS PROPERTY OF SYNTER. THEREFORE IS NOT ALLOWED TO BE REPRODUCED OR DISCLOSED TO THIRD PARTIES WITHOUT PRIOR AUTHORIZATION.
ALL RIGHTS RESERVED.

PROJECTION

DIMENSIONAL TOLERANCES STANDARDS WHEN NOT SPECIFICATED: ACCORDING TO ISO2768

SURFACE FINISHING: POLISHED

DESCRIPTION: *UPPER MALE PIVOT 810*

DESIGN BY: *R. CHIODELLI*	MATERIAL: AISI 304	WEIGHT (Kg): 0.19
APPROVED BY: *R. CHIODELLI*		ESCALE: 1:1.2
DATE: 16/10/2017	PART NO.: 810PIP.04	PAGE: 5 OF 6
		SHEETS: A4

REVISIONS

ZONE	REV.	DESCRIPTION	DATE	APPROVED

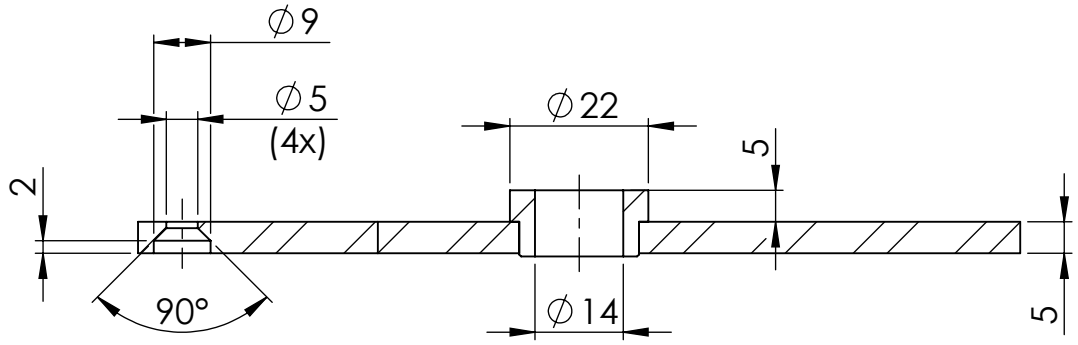

SECTION A-A

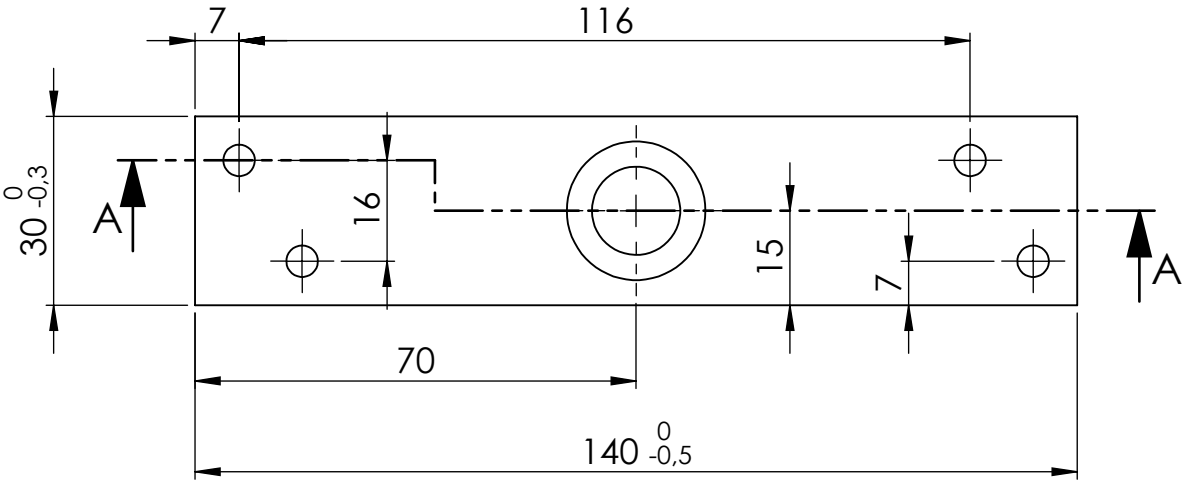

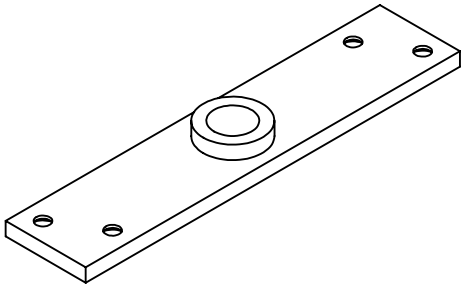

SYNTER

THIS DOCUMENT IS PROPERTY OF SYNTER. THEREFORE IS NOT ALLOWED TO BE REPRODUCED OR DISCLOSED TO THIRD PARTIES WITHOUT PRIOR AUTHORIZATION.
ALL RIGHTS RESERVED.

PROJECTION

DIMENSIONAL TOLERANCES STANDARDS WHEN NOT SPECIFICATED: ACCORDING TO ISO2768

SURFACE FINISHING: POLISHED

DESCRIPTION: *UPPER FEMALE PIVOT 810*

DESIGN BY: *R. CHIODELLI*	MATERIAL: AISI 304	WEIGHT (Kg): 0.16
APPROVED BY: *R. CHIODELLI*		ESCALE: 1:1.2
DATE: 16/10/2017	PART NO.: 810PIP.05	PAGE: 6 OF 6
		SHEETS: A4